加雲聯網股份有限公司

Dummy Project - Data Flow Diagram

版 別：1.0

制訂日期：2024 年 5 月 XX 日

修訂日期：2024 年 5 月 XX 日

制修部門：XXX

頁 數：X

核准	審查	制定

文件發行/修訂記錄

版次	發行日期	生效日期	制修內容摘要
1.0			

CONTENTS

1.0 Introduction 4
1.1 Purpose and Objectives 4
1.2 Scope of application 4
1.3 Glossary of Term and Definitions 4
1.3.1 Definitions 4
1.3.2 Abbreviations 5
1.4 Applicable Documents 5
1.4.1 Employer’s Requirements 5
1.4.2 Related Documents 5
2.0 Project Assets And SuC Description 6
2.1 SuC Description 6
2.2 The assets of the SuC (updated by ILRA) 7
3.0 ILRA updated Network Diagram 7
4.0 SuC dataflow diagram 8
5.0 The description of defense-in-depth architecture of SuC 12

1.0 Introduction

1.1 Purpose and Objectives

The purpose of this document is to document a Project/System Data Flow Diagram. This document describes the Data Flow Diagram of the dummy project. This document also describes the updated network diagram after initial level risk assessment (ILRA) (alse can be the Threat and Preliminary Risk Assessment) of this dummy project.

1.2 Scope of application

The System under Consideration (SuC) includes the power switch control system and Networks of the substation, the applicable scope of systems for this management plan includes:

1. Power switch control system:
   - SCADA system
   - Safety Control system
   - Configuration & Auxiliary management system

1.3 Glossary of Term and Definitions

1.3.1 Definitions

Definition	**Description**
Asset Owner	Individual or organization responsible for one or more Industrial Automation and Control Systems (IACSs).
Automation Solution	Control system and any complementary hardware and software components installed and configured to operate in an IACS.
Component	One of the parts that make up a product or system.
Dependent Component	Component external to the product on which the product depends.
Integration Service Provider	Service provider that provides integration activities for an Automation Solution including design, installation, configuration, testing, commissioning, and handover.
Maintenance Service Provider	Service provider that provides support activities for an Automation Solution after handover.
Product Supplier	Manufacturer of hardware and/or software products.
Recovery Point Objective	Time value that determines the maximum tolerable period of data loss due to a disaster (e.g., data corruption).
Recovery Time Objective	The overall length of time an information system’s components or an operation system’s components can be in the recovery phase before negatively impacting the organization’s mission or mission/business/operating functions.
Service Provider	Individual or organization (internal or external organization, manufacturer, etc.) that provides a specific support service and associated supplies in accordance with an agreement with the asset owner.

1.3.2 Abbreviations

Abbreviation	Clarification
SAT	Site Acceptance Test
SCS	Substation Control System
SIT	Site Integration Test

1.4 Applicable Documents

1.4.1 Employer's Requirements

No	Employer's DOC No	DOC Title	Ver
1			
2			
3			

1.4.2 Related Documents

No	Project's DOC No	Employer's DOC No	DOC Title	Ver
1	DUMMY202400##	BOSS202400##	Dummy - Preliminary network diagram	1
2	DUMMY202400##	BOSS202400##	Dummy – Data flow diagram	1
3				
4				
5				

2.0 Project Assets And SuC Description

2.1 SuC Description

A substation is a complex system composed of many elements such as transformers, capacitors, voltage regulators, and circuit breakers. Automated substation control will be implemented extensively in the smart grid systems to provide real-time monitoring and control through local area networks. Figure 2-1 shows the system architecture diagram of a substation.

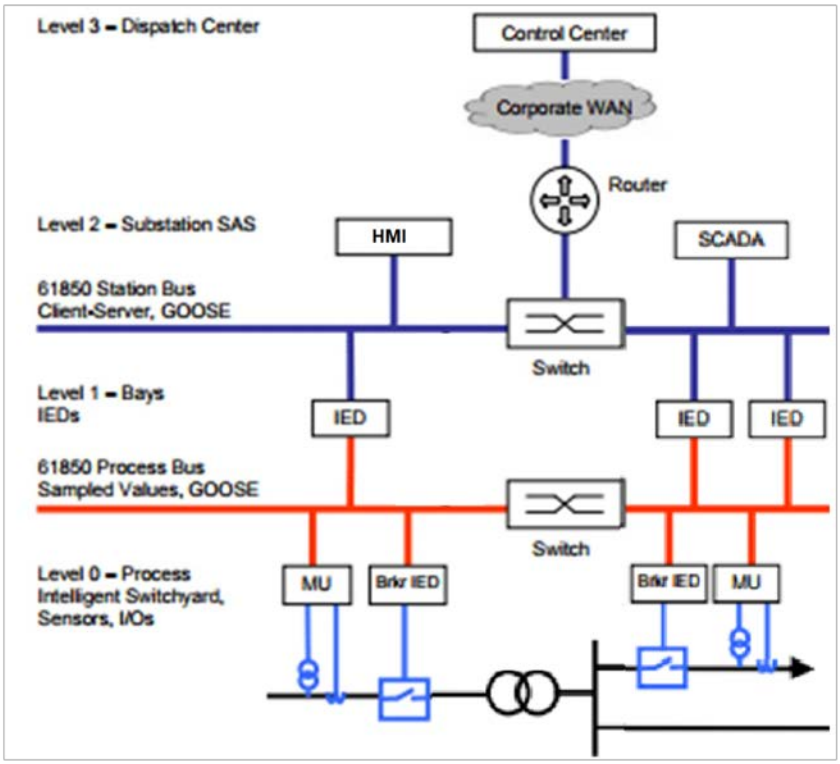

Figure 2-1 The system architecture diagram of the substation.

Substations are a critical component for maintaining electrical supply and load control in low voltage, medium voltage and high voltage electrical distribution networks. In order to ensure the proper functioning of substations and related equipment such as line-mounted switches and capacitors, most utilities use SCADA (supervisory control and data acquisition) systems to automate monitoring and control.

New sites typically implement a SCADA system to monitor and control substations and related equipment. However, older facilities can also benefit by adding a SCADA system or by upgrading an existing SCADA system to take advantage of newer technologies.

Not only will a new or upgraded SCADA system provide better monitoring and control, it can also extend the life of substations and related equipment by providing current data for troubleshooting small problems before they escalate. Furthermore, the ample historical data provided by SCADA systems can improve preventive maintenance scheduling and cut associated costs.

Electrical distribution systems involve many remote applications and sites, and monitoring and controlling these sites has often been difficult. To solve this problem, utilities began installing remote terminal/telemetry units (RTUs) at substations. Early RTUs were initially custom-made units, but later versions relied on standard hardware such as programmable logic controllers (PLCs) or industrial PCs. Intelligent electronic

devices (IEDs) are a more recent technology development, and these devices are now installed at most substations to some extent. These IEDs generally communicate with the substation RTU.

Power distribution to various electrical loads at substations is controlled by switchgear feeders. Sensors mounted on the switchgear collect various data on current, voltage, power and switchgear status. This data is transferred to the RTU, which is in turn polled by a SCADA system.

The SCADA system consists of a master control station with one or more PC-based human machine interfaces (HMIs). The SCADA system may also contain other secondary control stations with HMIs, and large substations may also have local HMIs.

Operators view information on the HMIs to monitor and control substation operations and related equipment. Modern SCADA systems are extremely adept at handling the large amounts of data necessary to monitor the electrical state of all power lines, cables and equipment.

2.2 The assets of the SuC (updated by ILRA)

The initial assets of the system under consideration (SuC) corresponds to the scope of work in this project include :

1. SCADA system:
   (1) SCADA HMI
   (2) IED (Control)
   (3) Ethernet Switch
2. Safety Control system
   (1) IED (Protection)
   (2) Ethernet Switch
3. Configuration & Auxiliary management system
   (1) Wireless AP (could be connected to a laptop)

3.0 ILRA updated Network Diagram

The ILRA updated Network Diagram of the SuC could refer to Figure 2-2 ILRA updated Network Diagram of the SuC. After ILRA analysis and partition the zones and conduits, the preliminary required equipments of security countermeasures also be presented in the diagram. For detail could refer to “Dummy - Update network diagram (ILRA).pdf”

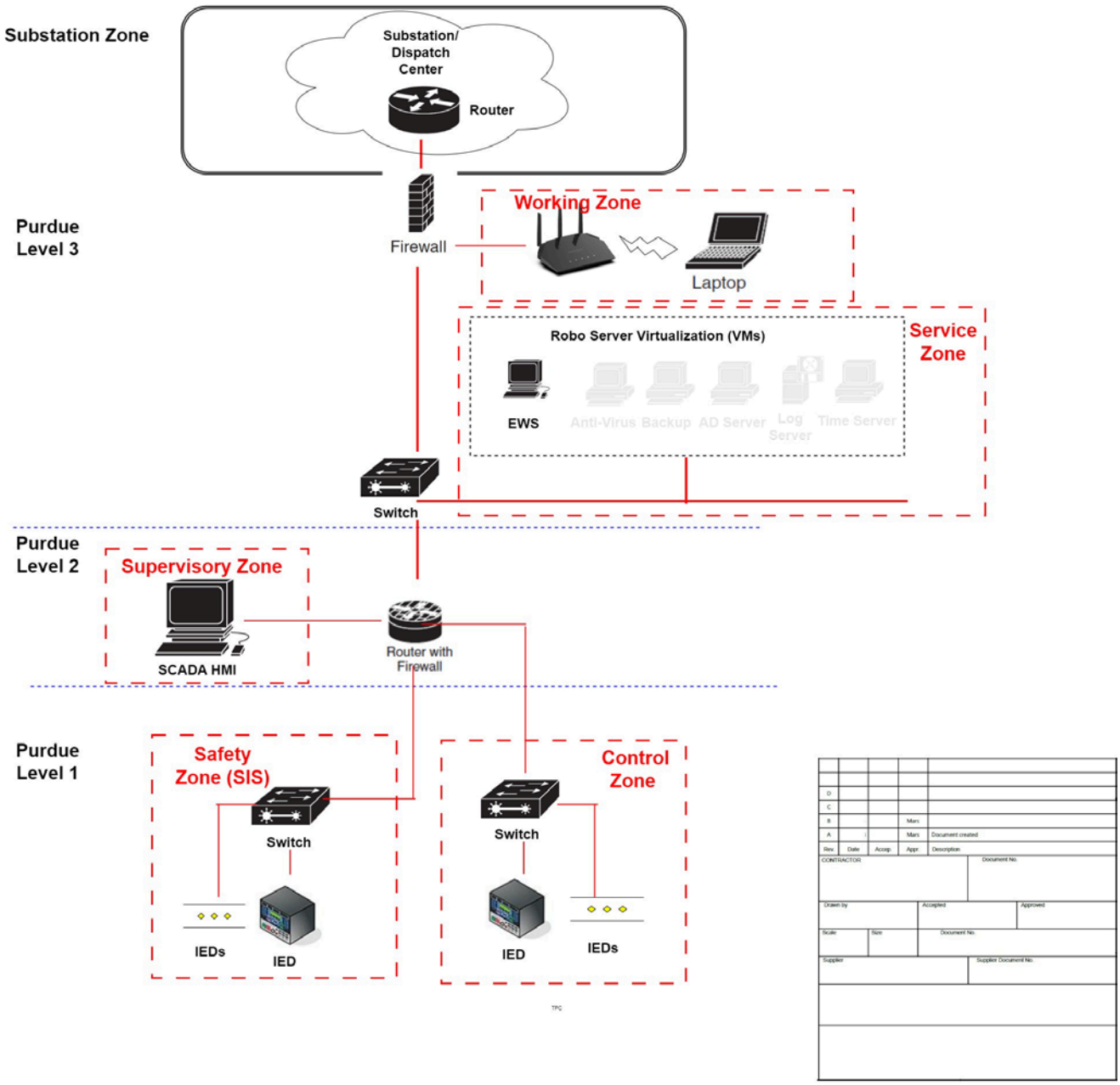

Figure 2-2 ILRA updated Network Diagram of the SuC.

4.0 SuC dataflow diagram

The dataflow Diagram of the SuC could refer to Figure 2-3 ILRA updated Network Diagram of the SuC. After ILRA analysis and partition the zones and conduits, the preliminary required equipments of security countermeasures also be presented in the diagram. For detail could refer to “Network_diagram_20241113-Data Flow Diagram.pdf”

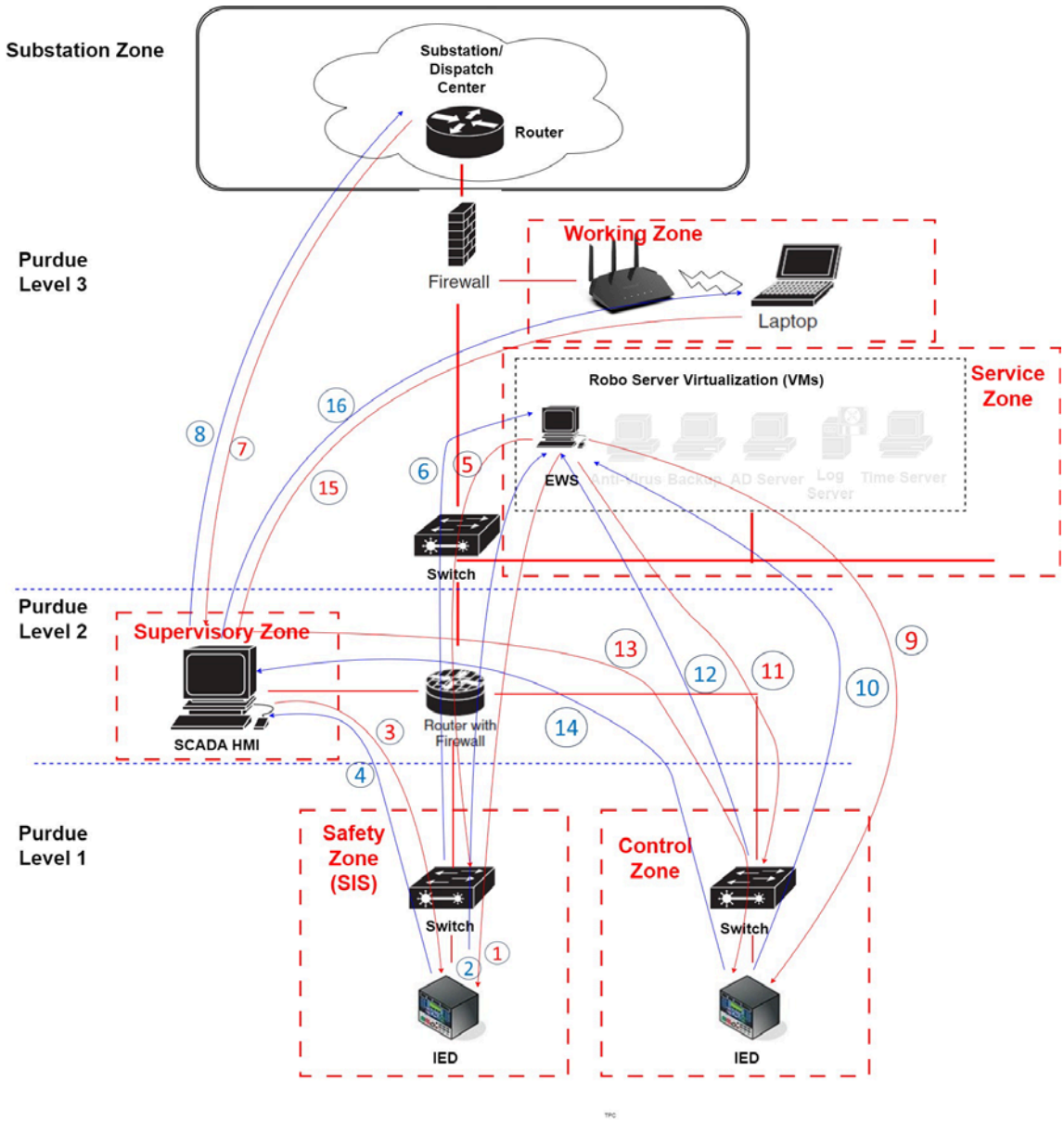

D				
C				
B			Mars	
A			Mars	Document created
Rev.	Date	Accep.	Appr.	Description

CONTRACTOR		Document No.
Drawn by	Accepted	Approved
Scale	Size	Document No.
Supplier		Supplier Document No.

Figure 2-3 Data Flow Diagram of the SuC.

Table 1. Detail data flow information for each connection of SuC

Refer Number in Figure	Description	From	To	Protocol	Type	Port
1	Connection for configuration setting of IED	EWS(04 Operation Zone)	IED(01 SIS Zone)	SSH	TCP	22
2	Response connection for configuration setting of IED	IED(01 SIS Zone)	EWS(04 Operation Zone)	SSH	TCP	22
3	Request protocol of connection for supervisory of IED	SCADA HMI(03 SCADA Zone)	IED(01 SIS Zone)	IEC61850 MMS	TCP	102
4	Response protocol of connection for supervisory of IED	IED(01 SIS Zone)	SCADA HMI(03 SCADA Zone)	IEC61850 MMS	TCP	102
5	Connection for configuration setting of Switch	EWS(04 Operation Zone)	Ethernet Switch(01 SIS Zone)	Https	TCP	443
6	Response connection for configuration setting of Switch	Ethernet Switch(01 SIS Zone)	EWS(04 Operation Zone)	Https	TCP	443
7	Remote access to SCADA HMI	PC(06 Interface Zone)	SCADA HMI(03 SCADA Zone)	RPC, RDP, Citrix ICA/HDX	TCP	135, 3389, 1494
8	Remote access to SCADA HMI	SCADA HMI(03 SCADA Zone)	PC(06 Interface Zone)	RPC, RDP, Citrix ICA/HDX	TCP	135, 3389, 1494
9	Connection for configuration setting of IED	EWS(04 Operation Zone)	IED(02 Control Zone)	SSH	TCP	22

10	Response connection for configuration setting of IED	IED(02 Control Zone)	EWS(04 Operation Zone)	SSH	TCP	22
11	Connection for configuration setting of Switch	EWS(04 Operation Zone)	Ethernet Switch(02 Control Zone)	Https	TCP	443
12	Response connection for configuration setting of Switch	Ethernet Switch(02 Control Zone)	EWS(04 Operation Zone)	Https	TCP	443
13	Request protocol of connection for supervisory of IED	SCADA HMI(03 SCADA Zone)	IED(02 Control Zone)	IEC61850 MMS	TCP	102
14	Response protocol of connection for supervisory of IED	IED(02 Control Zone)	SCADA HMI(03 SCADA Zone)	IEC61850 MMS	TCP	102

5.0 The description of defense-in-depth architecture of SuC

The first default rule in all Firewall of OT Conduit should be “Deny All”.

The defense-in-depth architecture of SuC include:

1. Outside zone to Purdue Level 3
   (1) Setup a Firewall with limiting the allowed asset and service connetion from Substation Zone to Supervisory zone and Service zone.
   (2) Require multi-factor authentication for the connetion from Substayion Zone.
   (3) Encrypt the connetion from Substayion Zone.
   (4) Setup a firewall with limiting the allowed asset and service connetion from Working Zone to Supervisory zone.
   (5) Request the security for Web access from Working Zone to Supervisory zone.
   (6) Encrypt the connetion from Working Zone.
2. Purdue Level 3 to Purdue Level 2
   (1) Setup a Managed Switch with whitelisting asset list to limit the allowed asset and service connetion from Service Zone to Supervisory zone, Safety Zone, and Control zone.
3. Purdue Level 2 to Purdue Level 1
   (1) Setup a Router with Firewall with whitelisting asset list to limit the allowed asset and service connetion from Service Zone, Supervisory zone to Safety Zone, and Control zone. The whitelisting allowed data flow should be limited to 4.0 SuC dataflow diagram.
   (2) Setup a Router with Firewall with firewall rule only allow limiting asset and service connetion from Supervisory zone to Safety Zone. The whitelisting allowed data flow should be limited to 4.0 SuC dataflow diagram.
   (3) All the communications external to the Safety (SIS) Zone, including remote access communications, should be prohibited to interfere with the operation of the SIS. All remote access communications (ex. Port 3389) with IPs in Safety (SIS) Zone should be denied in Router with Firewall rules.
   (4) The IEDs in Safety (SIS) Zone should set to “Run mode” in configuration application or by a manual physical switch (disable SIS configuration mode) when they are under operation, to prohibit the SIS from being configured.

<<Text End>>